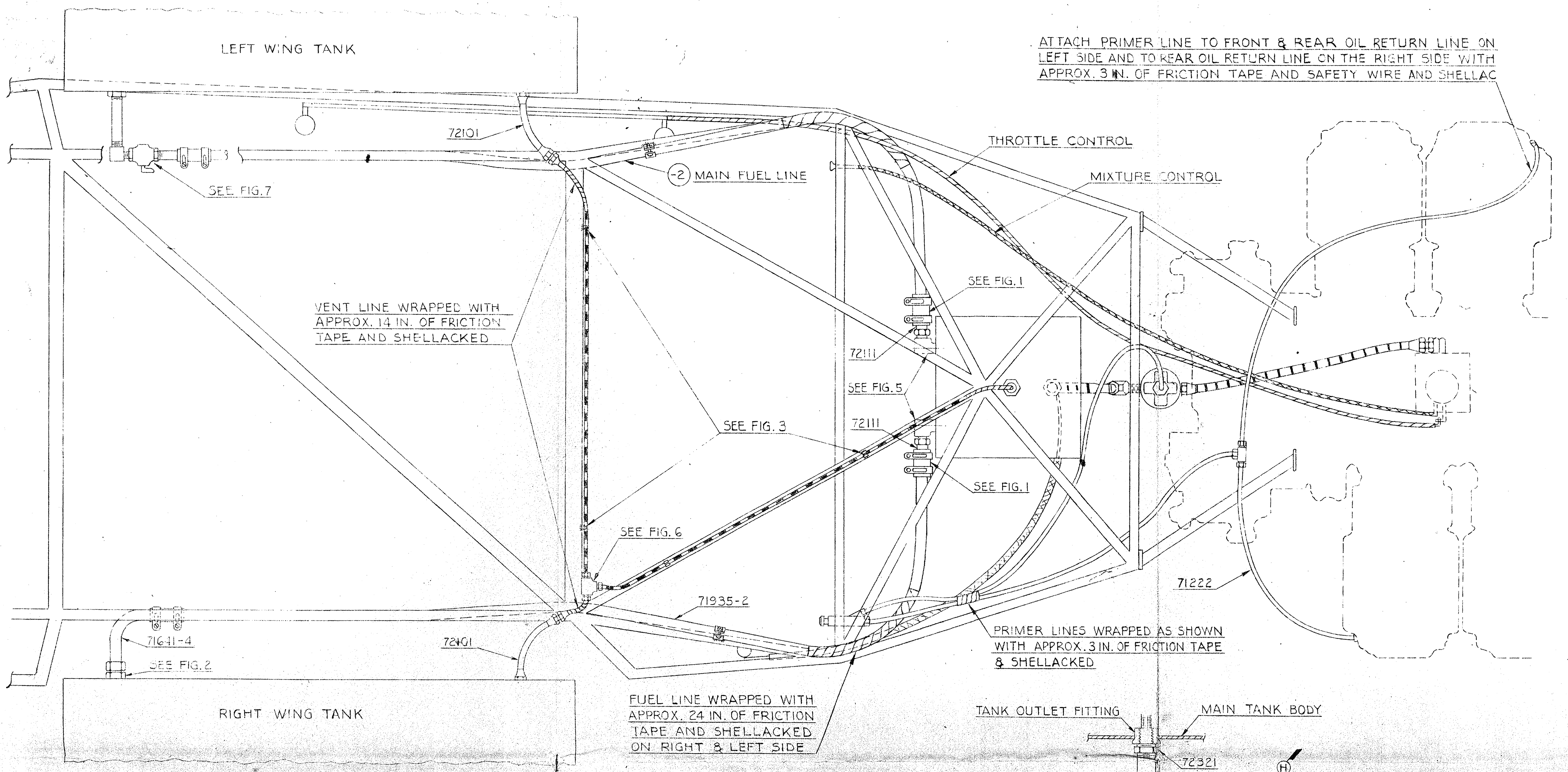
LEFT WING TANK
THROTTLE CONTROL
MIXTURE CONTROL
72101
(-2) MAIN FUEL LINE
SEE FIG. 7
SEE FIG. 1
72111
SEE FIG. 5
72111
SEE FIG. 1
SEE FIG. 3
SEE FIG. 6
71935-2
71222
71641-4
SEE FIG. 2
72401
RIGHT WING TANK

ATTACH PRIMER LINE TO FRONT & REAR OIL RETURN LINE ON LEFT SIDE AND TO REAR OIL RETURN LINE ON THE RIGHT SIDE WITH APPROX. 3 IN. OF FRICTION TAPE AND SAFETY WIRE AND SHELLAC

VENT LINE WRAPPED WITH APPROX. 14 IN. OF FRICTION TAPE AND SHELLACKED

PRIMER LINES WRAPPED AS SHOWN WITH APPROX. 3 IN. OF FRICTION TAPE & SHELLACKED

FUEL LINE WRAPPED WITH APPROX. 24 IN. OF FRICTION TAPE AND SHELLACKED ON RIGHT & LEFT SIDE

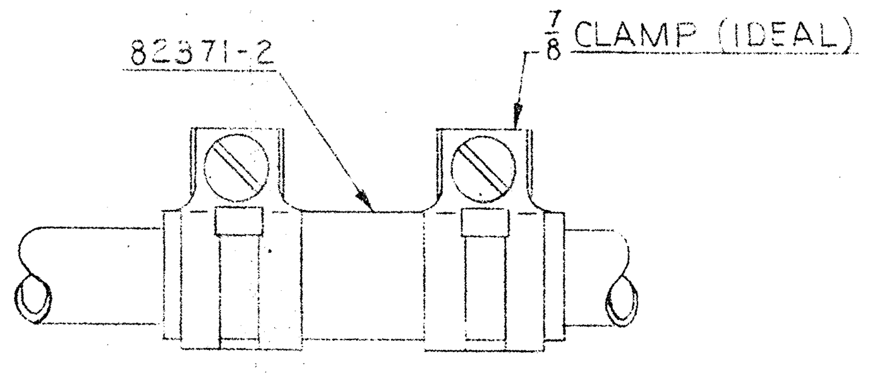
82371-2
7/8 CLAMP (IDEAL)

FIG. 1
FULL SIZE

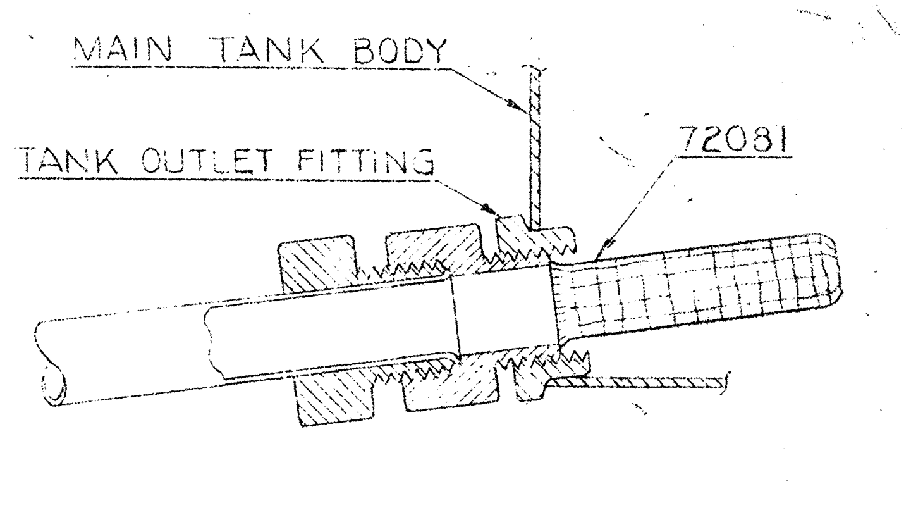
MAIN TANK BODY
TANK OUTLET FITTING
72081

FIG. 2
FULL SIZE

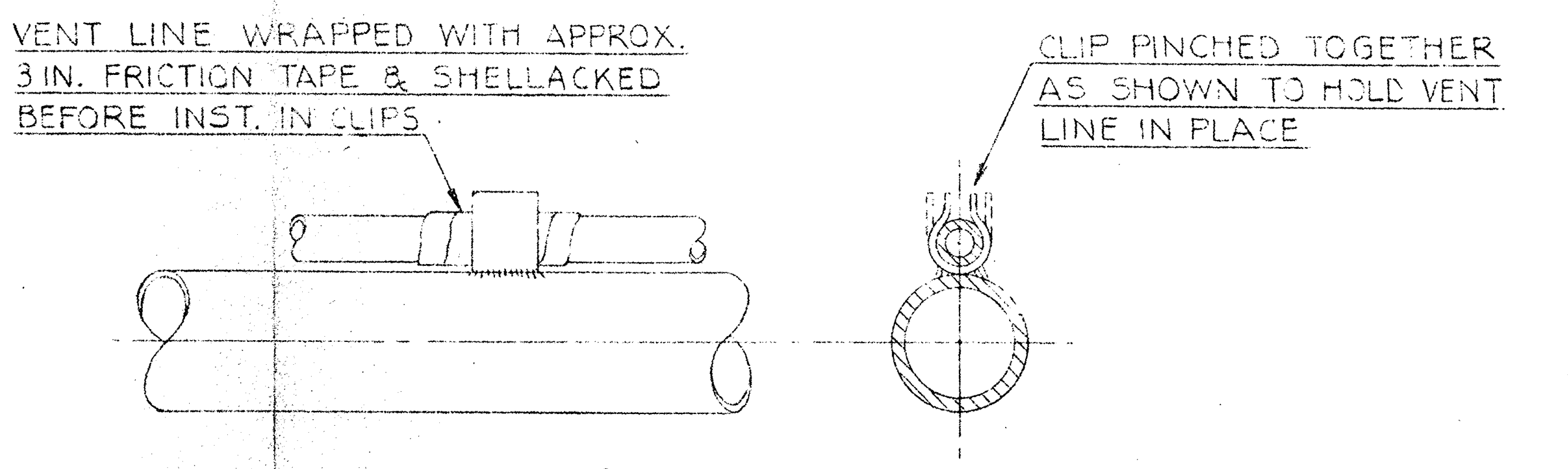
VENT LINE WRAPPED WITH APPROX. 3 IN. FRICTION TAPE & SHELLACKED BEFORE INST. IN CLIPS

CLIP PINCHED TOGETHER AS SHOWN TO HOLD VENT LINE IN PLACE

FIG. 3
FULL SIZE

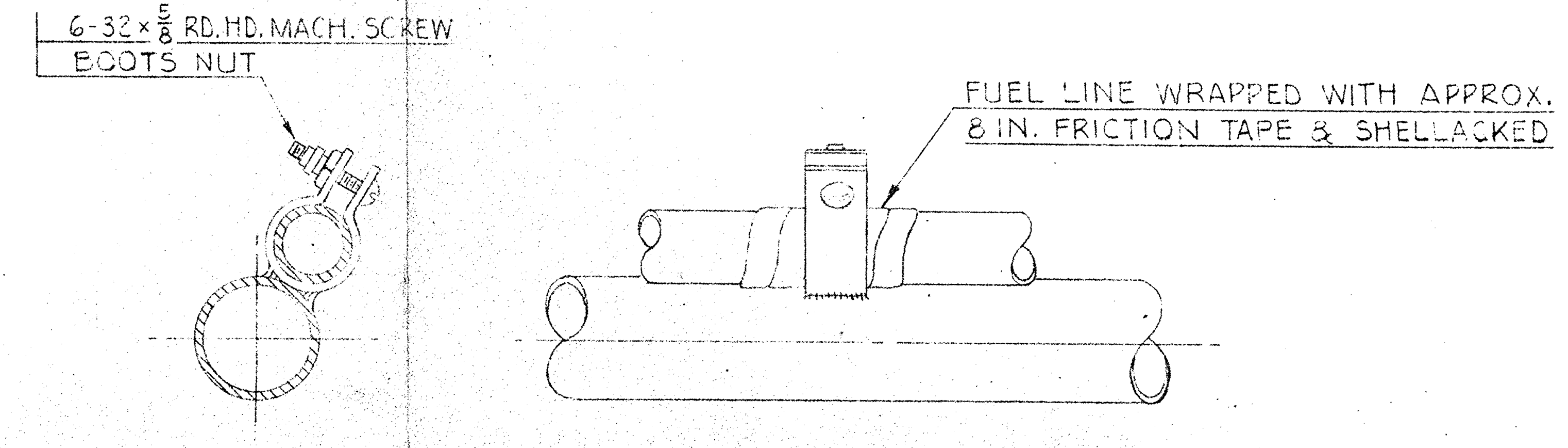
6-32 x 5/8 RD. HD. MACH. SCREW
BOOTS NUT

FUEL LINE WRAPPED WITH APPROX. 8 IN. FRICTION TAPE & SHELLACKED

FIG. 4
FULL SIZE

TANK OUTLET FITTING
MAIN TANK BODY
72321
72331-3
74032
H
MAIN FUEL LINE
84052
72331-2
SEE FIG. 1

FIG. 7
HALF SIZE

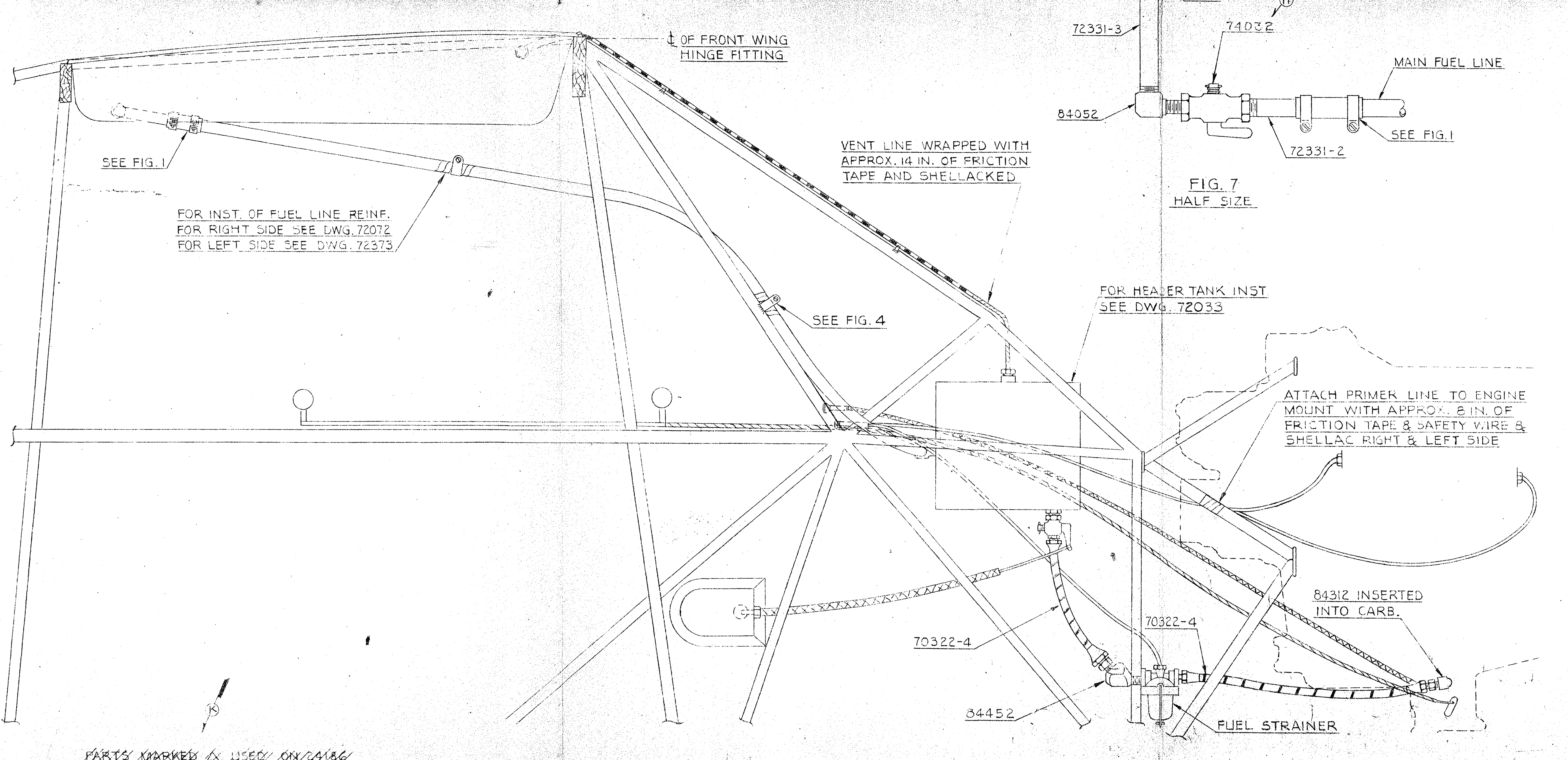
℄ OF FRONT WING HINGE FITTING
SEE FIG. 1
SEE FIG. 4
70322-4
70322-4
84312 INSERTED INTO CARB.
84452
FUEL STRAINER

FOR INST. OF FUEL LINE REINF. FOR RIGHT SIDE SEE DWG. 72072 FOR LEFT SIDE SEE DWG. 72373

VENT LINE WRAPPED WITH APPROX. 14 IN. OF FRICTION TAPE AND SHELLACKED

FOR HEADER TANK INST SEE DWG. 72033

ATTACH PRIMER LINE TO ENGINE MOUNT WITH APPROX. 8 IN. OF FRICTION TAPE & SAFETY WIRE & SHELLAC RIGHT & LEFT SIDE

~~PARTS MARKED ⚠ USED ON 24186~~

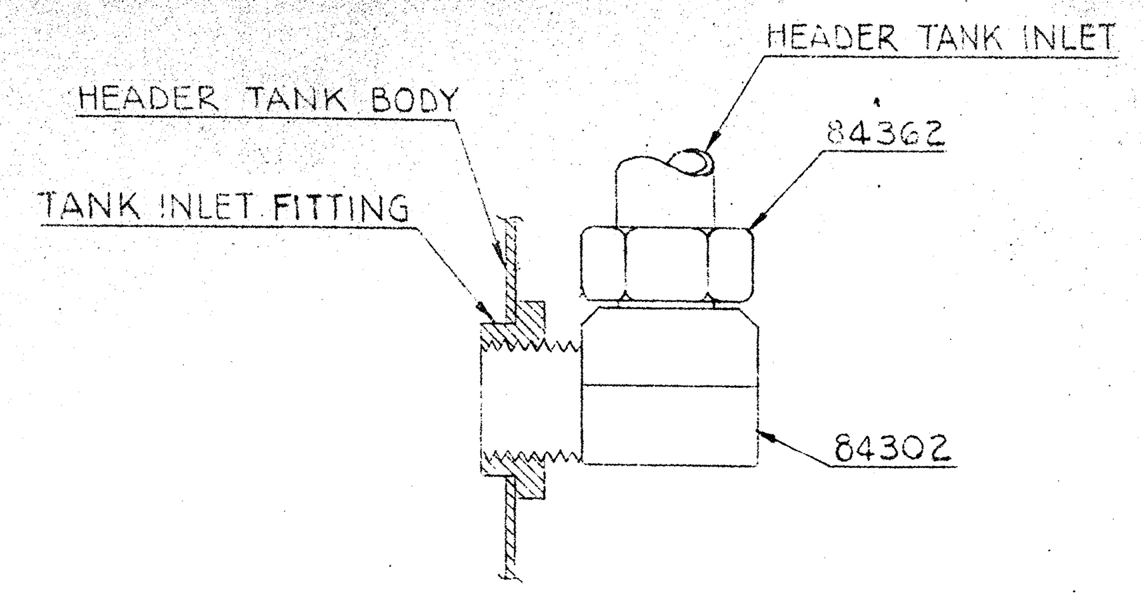
HEADER TANK INLET
HEADER TANK BODY
84362
TANK INLET FITTING
84302

FIG. 5
FULL SIZE

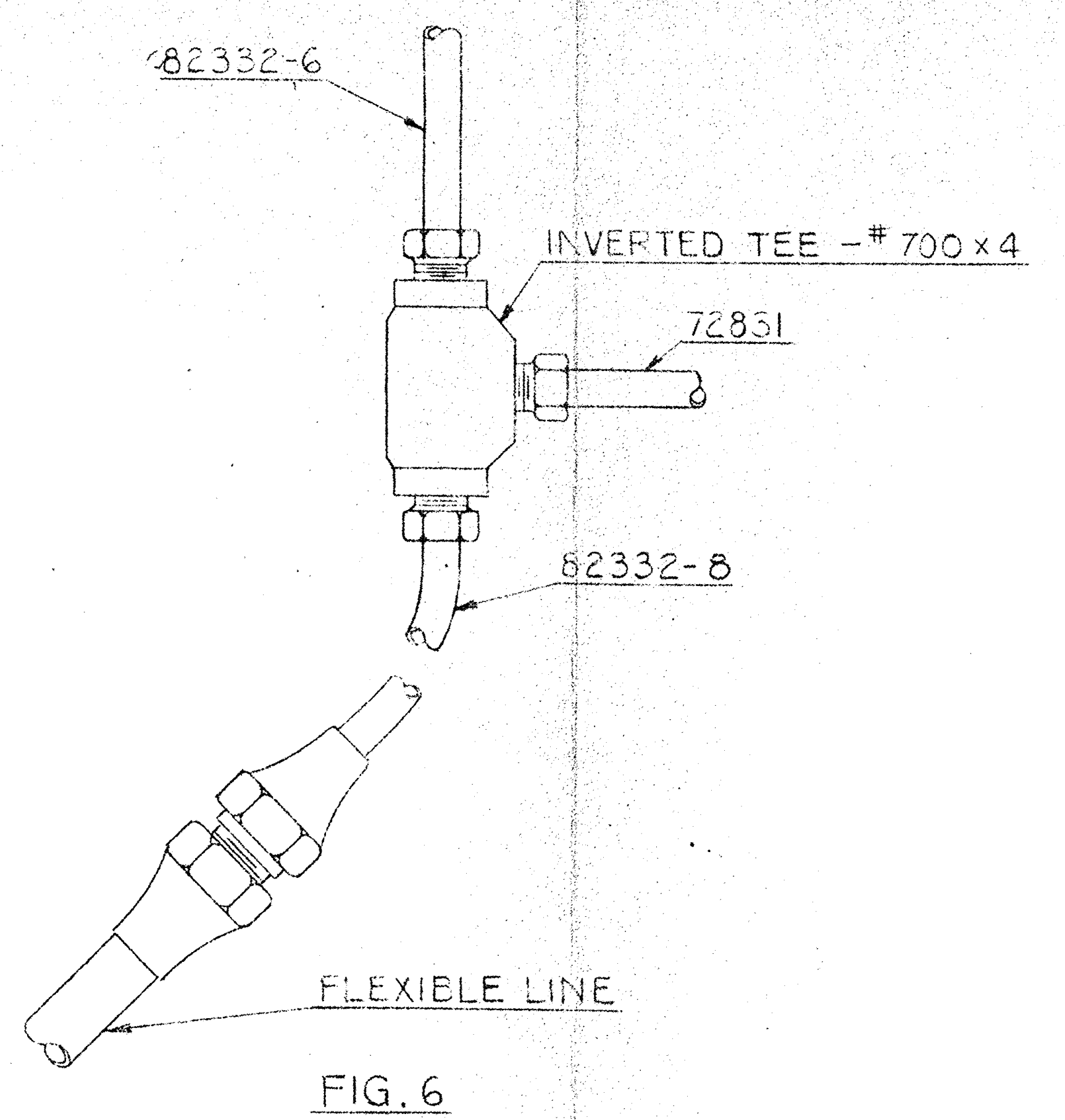
82332-6
INVERTED TEE - #700 x 4
72831
82332-8
FLEXIBLE LINE

FIG. 6
FULL SIZE

LIMITS, SHOP PRACTICES AND FINISH, UNLESS OTHERWISE NOTED, TO BE IN ACCORDANCE WITH PIPER SPECIFICATIONS 09 AND 010.

PART NO.	NO. REQ.	SIZE	DESCRIPTION
-2	-	1/2 O.D. x .032 x 55 3/8	COPPER OR ALUM.

MATERIAL

SCALE 3IN.=1FT. & NOTED
TOTAL WT.-LBS
FINISH

LET.	REVISION	DATE	BY
L	SUPERSEDED BY 10138	11-15-45	I.M.M.
K	N.A. NOTE CANCELED FOR -2	11-15-45	I.M.M.
J	J5C N.A. 75266 WAS 71876	11-7-44	I.D.B.
H	PIPER NO. WAS PURCH. NO.	8-17-44	I.M.M.
G	J5C N.A. 14105 WAS 14103	8-9-44	I.D.B.
F	REDRAWN & REVISED	1-20-44	A.H.

MODEL	PER SHIP	NEXT ASSEMBLY	SUPERSEDES	SUP. BY
J5C	1	75266, 23334 24186, 14105		10138

PIPER AIRCRAFT CORP.
LOCK HAVEN, PENNA.

SYSTEM INST.-
38 GALLON FUEL

DRAWN	CHECKED	APPROVED
AL HENRY 1-20-44	M. G. S. 1-24-44	

JUN 26 1953

72275